DocuSign Envelope ID: 3FD4CB22-59BA-40F5-9B73-A7DB83E26FEF

PROJECT REFERENCE NO.	SHEET NO.
17BP.14.R.143	2

ROADWAY DESIGN ENGINEER
NORTH CAROLINA PROFESSIONAL SEAL 26960 ENGINEER
DocuSigned by: KATE M. SCHULER
5/6/2016

PAVEMENT DESIGN ENGINEER
NORTH CAROLINA PROFESSIONAL SEAL 20134 ENGINEER
DocuSigned by: CHRISTOPHER M. CRISP
5/6/2016

DOCUMENT NOT CONSIDERED FINAL UNLESS ALL SIGNATURES COMPLETED

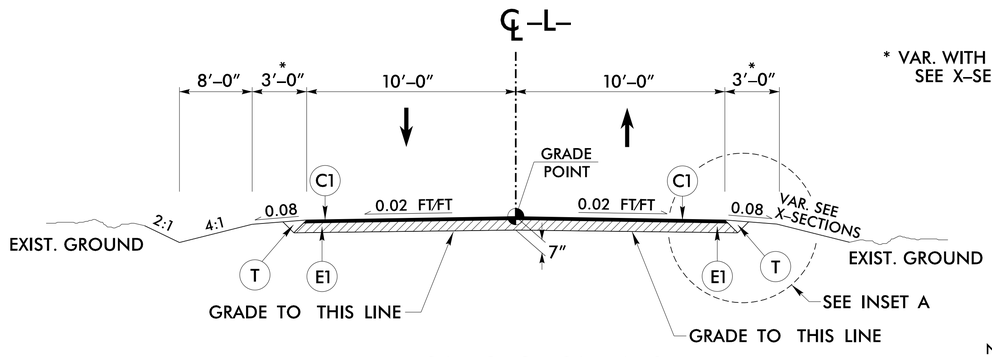

* VAR. WITH GUARDRAIL SEE X-SECTIONS

TYPICAL SECTION NO. 1

USE TYPICAL SECTION NO. 1

–L– STA. 14+25.00 TO –L– STA. 15+66.56 (BEGIN BRIDGE)
–L– STA. 16+14.16 (END BRIDGE) TO –L– STA. 18+00.00

NOTE: Pave Existing Driveway Lt. –L– Sta. 16+15 With 3″ S9.5B to Limits of Construction as Shown on Plans

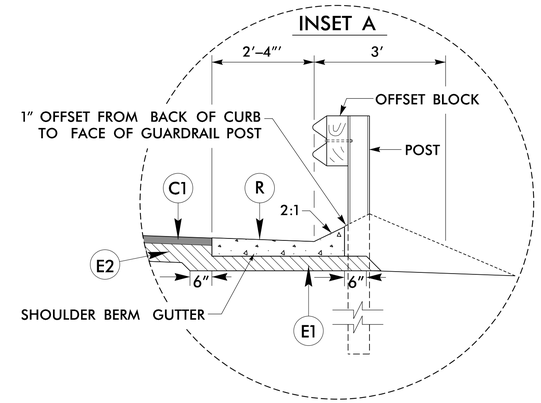

INSET A

END BRIDGE RT TO –L– STA. 16+56 RT

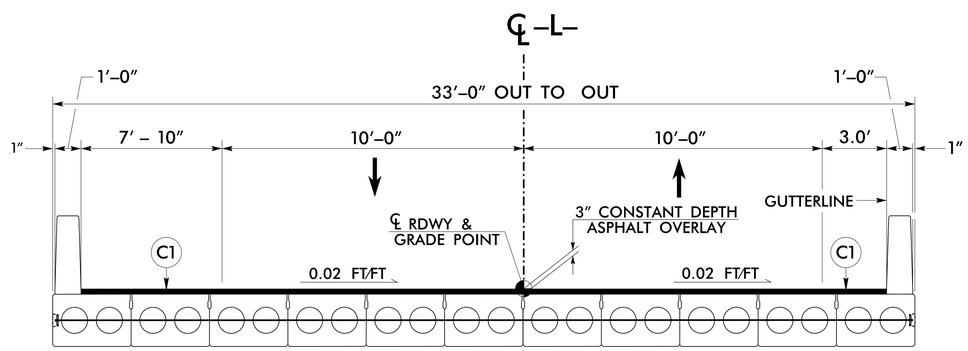

TYPICAL SECTION NO. 2

USE TYPICAL SECTION NO. 2

–L– STA. 15+66.56 (BEGIN BRIDGE) TO
–L– STA. 16+14.16 (END BRIDGE)

PAVEMENT SCHEDULE	
C1	PROP. APPROX. 3″ ASPHALT CONCRETE SURFACE COURSE, TYPE S9.5B, AT AN AVERAGE RATE OF 168 LBS. PER SQ. YD. IN EACH OF TWO LAYERS.
E1	PROP. APPROX. 4″ ASPHALT CONCRETE BASE COURSE, TYPE B25.0B, AT AN AVERAGE RATE OF 456 LBS. PER SQ. YD.
E2	PROP. VAR. DEPTH ASPHALT CONCRETE BASE COURSE, TYPE B25.0B, AT AN AVERAGE RATE OF 114 LBS. PER SQ. YD. PER 1″ DEPTH. TO BE PLACED IN LAYERS NOT LESS THAN 3″ IN DEPTH OR GREATER THAN 5½″ IN DEPTH.
R	SHOULDER BERM GUTTER (NCDOT STD. DRAWING NO. 846.01)
T	EARTH MATERIAL

NOTE: PAVEMENT EDGE SLOPES ARE 1:1 UNLESS SHOWN OTHERWISE

6/2/99
$$$$SYSTIME$$$$
$$$$DGN$$$$
$$$$DGNAME$$$$